NOTES:
1. A SELF-LOCKING VALVE EXTENSION STEM MAY BE REQUIRED IF NOTED ON PLANS. THE VALVE EXTENSION STEM SHALL EXTEND TO 12"-24" BELOW FINISHED GRADE SURFACE.
2. AT BURY DEPTHS GREATER THAN 80 INCHES (6'- 8'), THE USE OF 8" PVC SDR-26 SERWER PIPE AS AN EXTENSION IS ALLOWED BETWEEN THE BASE AND THE BOTTOM PIECE OF A TWO-PIECE VAVLE BOX ASSEMBLY.

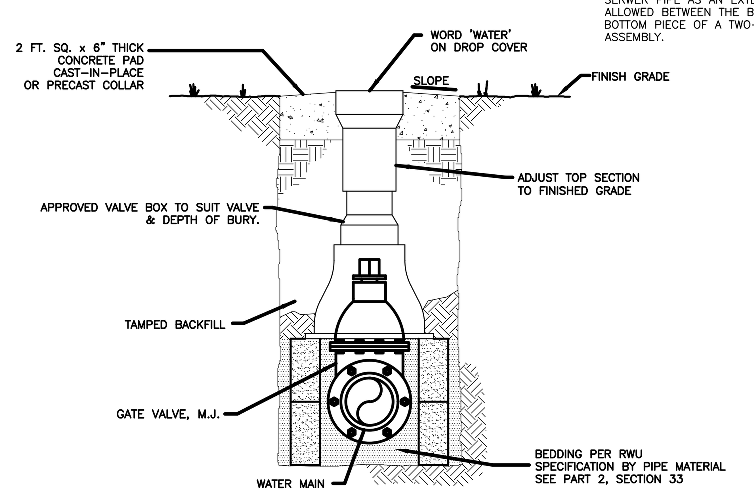


## GATE VALVE DETAIL
N.T.S.

WD-1 / 1 — REV. 12/2021

NOTES:
1. IF DEPTH OF BURY EXCEEDS 7 FT., A SELF-LOCKING VALVE EXTENSION STEM SHALL BE REQUIRED. THE VALVE EXTENSION STEM SHALL EXTEND TO 1-2 FEET BELOW FINISHED GRADE SURFACE.

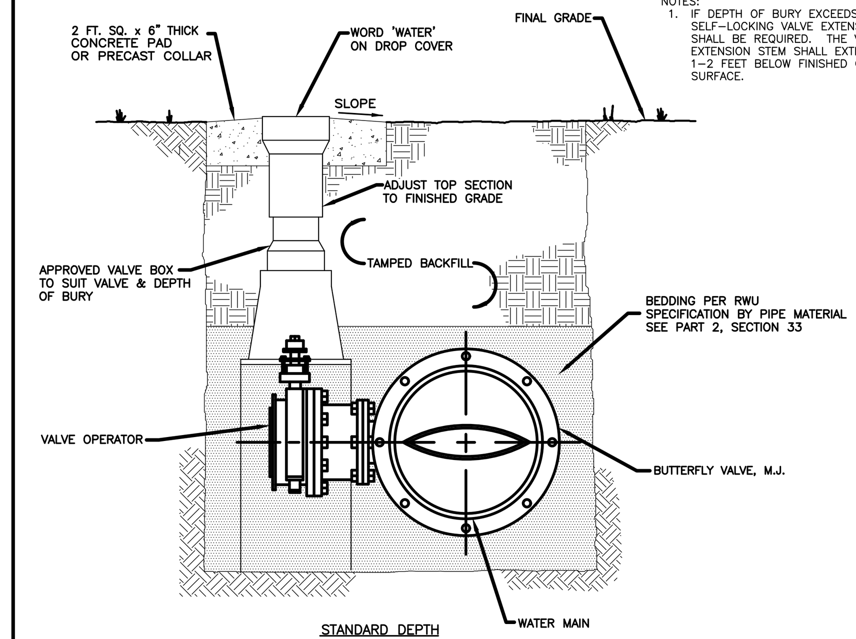


## BUTTERFLY VALVE DETAIL
## 12-INCH WATER MAINS AND LARGER
N.T.S.

WD-1 / 2 — REV. 12/2021

NOTES:
1. COPPER LINE SHALL BE CONTINUOS UPHILL GRADE FROM THE WATER MAY TO AIR & VAC RELEASE VALVE.
2. AIR & VAC. RELEASE VALVE ASSEMBLY MAY BE INSTALLED ABOVE AND PARALLEL TO WATER MAIN (COMMON TRENCH) IF NOTED ON PLANS AND NOT SUBJECT TO VEHICLE TRAFFIC.
3. 1" COPPER TUBING MAY BE ROLLED TO A RADIUS NOT LESS THAN 24".

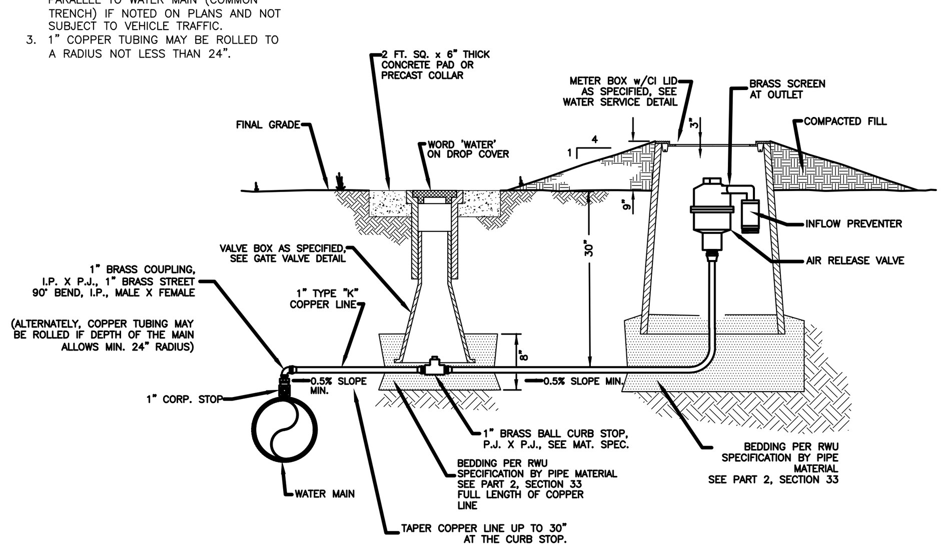


## 1" AIR & VACUUM RELEASE VALVE ASSEMBLY
N.T.S.

WD-1 / 3 — REV. 12/2021

NOTES:
1. ALL HYDRANTS TO BE SET PLUMB W/ NOZZLE FACING THE STREET.

HYDRANT SHALL NOT BE IN THE GREEN SPACE BETWEEN BACK OF CURB AND SIDEWALK. A MINIMUM OF 2 FT. OF CLEARANCE IS REQUIRED FROM SIDEWALK OR VERTICAL APPURTENANCE.

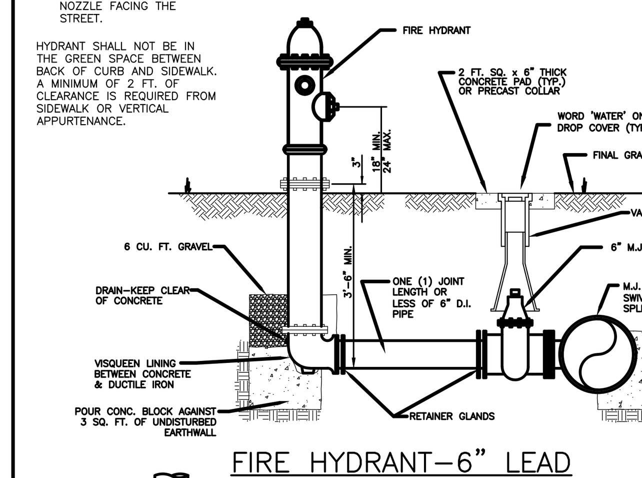


## FIRE HYDRANT-6" LEAD
WD-1 / 4A

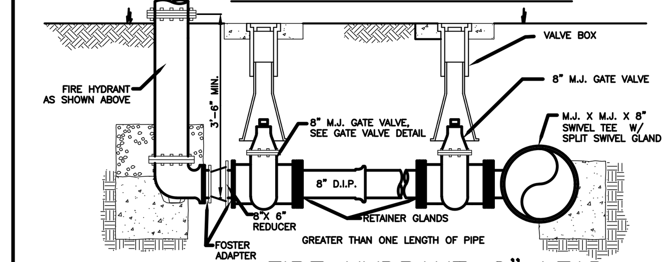


## FIRE HYDRANT-8" LEAD
WD-1 / 4B — REV. 12/2021

NOTES:
1. METER SERVICES LARGER THAN 1" REQUIRE A SERVICE TAP/VAVLE (CONTRACTOR'S RESPONSIBILIT).THE 1 1/2" METER SERVICE REQUIRES A 2" TAPPED PLUB, M.J. 6" LONG 2" DIA. BRASS NIPPLE AND A 2" GATE VALVE: THE 2" METER SERVICE REQUIRES A 2" TAPPED PLUB, M.J., 6" LONG 2" DIA. BRASS NIPPLE AND A 2" GATE VAVLE.
2. THE SERVICE LINE & METER SERVICE, LARGER AND 1:, CONNECTING TO THE TAP/VALVE WILL BE BUILT BY THE ROGERS WATER UTILITIES ON A "COST PLUS" BASIS PAID BY THE APPLICANT.

EFFECTIVE JUNE 9, 2006, DEVELOPERS HAVE THE OPTION OF SETTING 1 1/2" AND 2" METERS AND CONSTRUCTION OF THE RELATED METER BOXES. RWU WILL CONTINUE TO DO THESE INSTALLATIONS,IF REQUESTED, BUT DO OFFER THE DEVELOPER THE OPPORTUNITY TO DO THIS WORK PROVIDING BETTER CONTROL OF THEIR CONSTRUCTION SCHEDULE. ACTUAL CONNECTIONS TO EXISTING WATER MAINS WILL BE MADE BY RWU AT THE DEVELOPER'S EXPENSE.

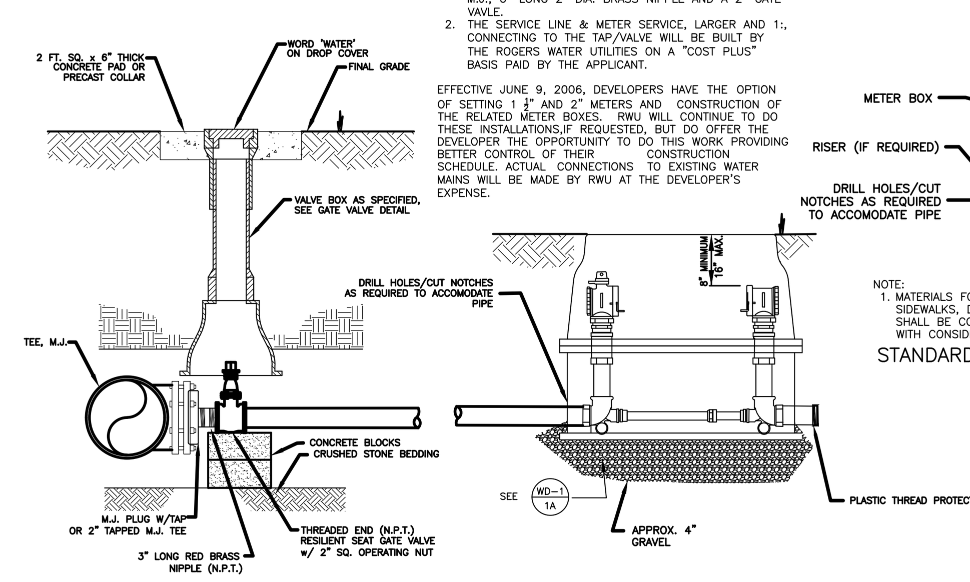


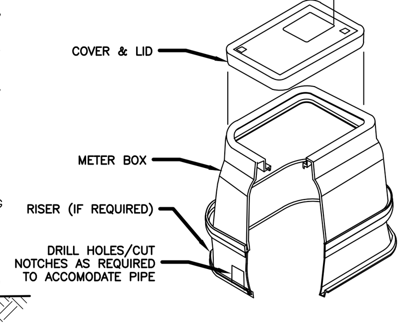


NOTE:
1. MATERIALS FOR METER BOXES PROPOSED IN SIDEWALKS, DRIVEWAYS, AND OTHER PAVED AREAS SHALL BE CONSIDERED ON AN INDIVIDUAL BASIS, WITH CONSIDERATION GIVEN TO PROPOSED LOADING.

STANDARD 1½"-2" METER BOX

NOTE:
1. C.I. VALVE BOX TO BE ENTIRELY SUPPORTED BY CONCRETE BLOCKS/BRICKS TO SUIT. VALVE BOX MUST NOT BEAR ON VALVE/PIPE.

## STANDARD 1½"-2" WATER SERVICE TAP DETAILS
## FOR NEW CONSTRUCTION
(CONNECTIONS TO EXISTING MAINS WILL BE MADE BY R.W.U.)
N.T.S.

WD-1 / 5 — REV. 12/2025

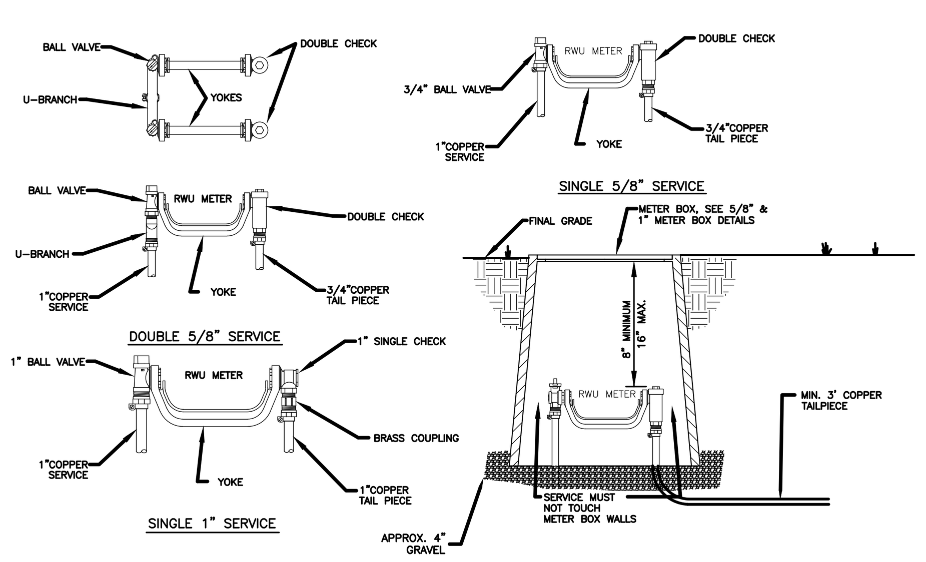


## STANDARD 5/8" & 1" WATER SERVICE DETAILS
N.T.S.

WD-1 / 6 — REV. 12/2021

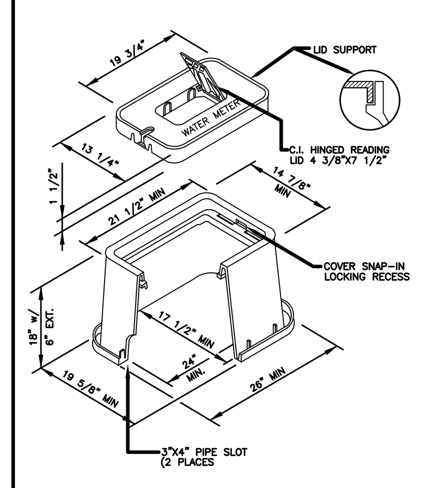


TYPICAL 1" METER BOX DETAIL
(SINGLE ONLY)

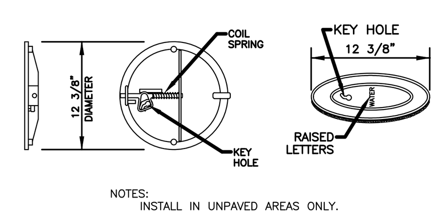


NOTES:
INSTALL IN UNPAVED AREAS ONLY.

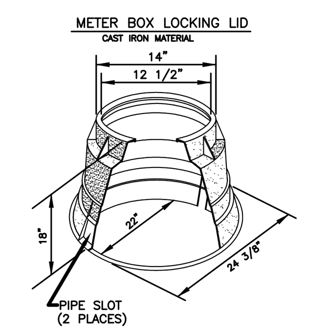


TYPICAL 5/8" METER BOX DETAIL
(SINGLE & DOUBLE)

## 5/8" & 1" METER BOX DETAILS
N.T.S.

WD-1 / 7 — REV. 12/2021

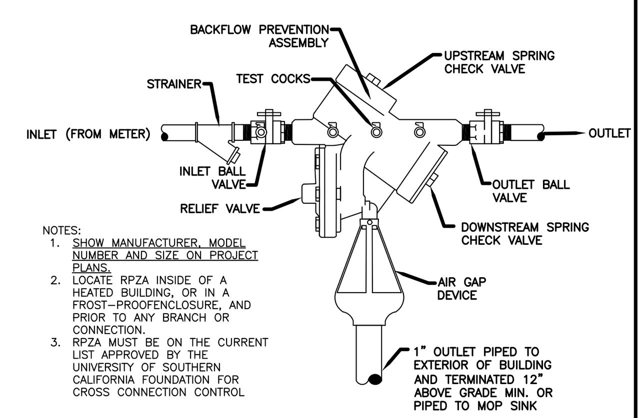


NOTES:
1. SHOW MANUFACTURER, MODEL NUMBER AND SIZE ON PROJECT PLANS.
2. LOCATE RPZA INSIDE OF A HEATED BUILDING, OR IN A FROST-PROOFENCLOSURE, AND PRIOR TO ANY BRANCH OR CONNECTION.
3. RPZA MUST BE ON THE CURRENT LIST APPROVED BY THE UNIVERSITY OF SOUTHERN CALIFORNIA FOUNDATION FOR CROSS CONNECTION CONTROL

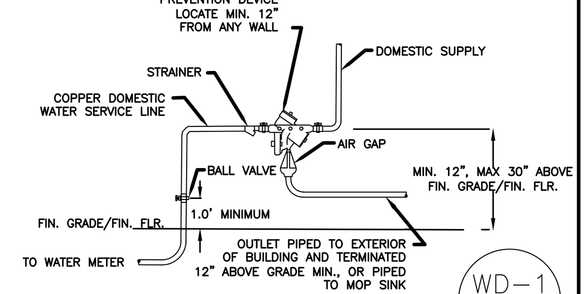


## REDUCED PRESSURE ZONE ASSEMBLY (RPZA)

WD-1 / 8 — REV. DEC. 2006

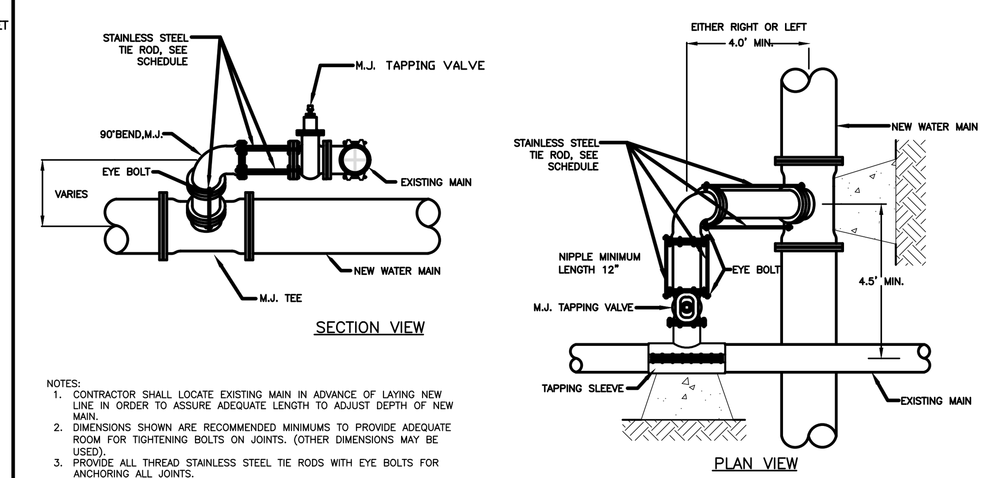


NOTES:
1. CONTRACTOR SHALL LOCATE EXISTING MAIN IN ADVANCE OF LAYING NEW LINE IN ORDER TO ASSURE ADEQUATE LENGTH TO ADJUST DEPTH OF NEW MAIN.
2. DIMENSIONS SHOWN ARE RECOMMENDED MINIMUMS TO PROVIDE ADEQUATE ROOM FOR TIGHTENING BOLTS ON JOINTS. (OTHER DIMENSIONS MAY BE USED).
3. PROVIDE ALL THREAD STAINLESS STEEL TIE RODS WITH EYE BOLTS FOR ANCHORING ALL JOINTS.
4. ROTATE FITTINGS AS REQUIRED TO MATCH.
5. THRUST BLOCKING IS REQUIRED FOR LOWER MJ TEE. REFER TO DETAIL WD-1/20 THIS SHEET.

## SWING CONNECTION - NEW MAIN TO EXISTING MAIN
N.T.S.

WD-1 / 9 — REV. 12/2021

ANCHOR COLLAR SCHEDULE

| PIPE SIZE | W | H | T | M | "A" BARS | "B" BARS |
|---|---|---|---|---|---|---|
| 6" | 1.5' | 2.0' | 1.0' | M.J. RETAINER GLAND | #6@6" | #6@6" |
| 8" | 1.5' | 2.5' | 1.0' | M.J. RETAINER GLAND | #6@6" | #6@6" |
| 12" | 2.0' | 4.0' | 1.5' | M.J. RETAINER GLAND | #6@6" | #6@6" |
| 18" | 3.0' | 5.0' | 2.0' | M.J. RETAINER GLAND | #6@6" | #6@6" |
| 24" | 3.5' | 5.5' | 2.0' | M.J. RETAINER GLAND | #7@6" | #6@10" |

(DIMENSIONS: W, H, T, M; REINFORCING BARS: "A" BARS, "B" BARS)

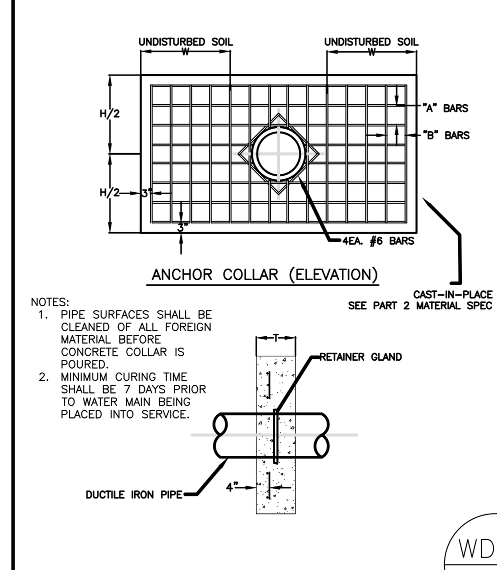


NOTES:
1. PIPE SURFACES SHALL BE CLEANED OF ALL FOREIGN MATERIAL BEFORE CONCRETE COLLAR IS POURED.
2. MINIMUM CURING TIME SHALL BE 7 DAYS PRIOR TO WATER MAIN BEING PLACED INTO SERVICE.

## ANCHOR COLLAR BLOCK
N.T.S.

WD-1 / 10 — REV. 12/2021

SCHEDULE OF TIE RODS

| SIZE | NUMBER OF RODS PER FITTING | DIAMETER OF S.S. RODS |
|---|---|---|
| 4"-8" | 2 | 3/4" |
| 12" | 4 | 3/4" |

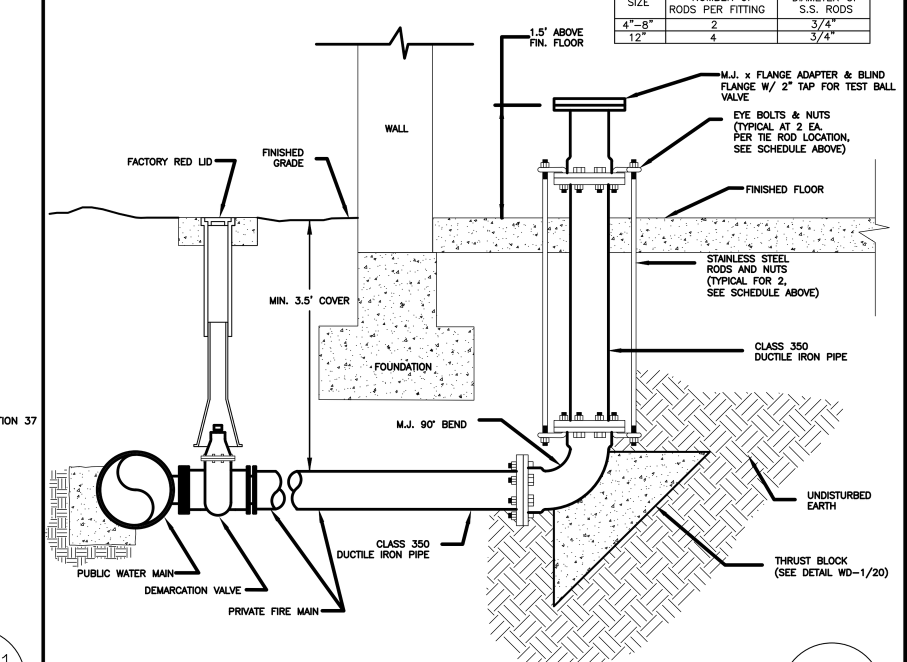


## IN-BUILDING D.I. FIRE SYSTEM RISER LEAD-IN DETAIL
N.T.S.

WD-1 / 11A — REV. 12/2025

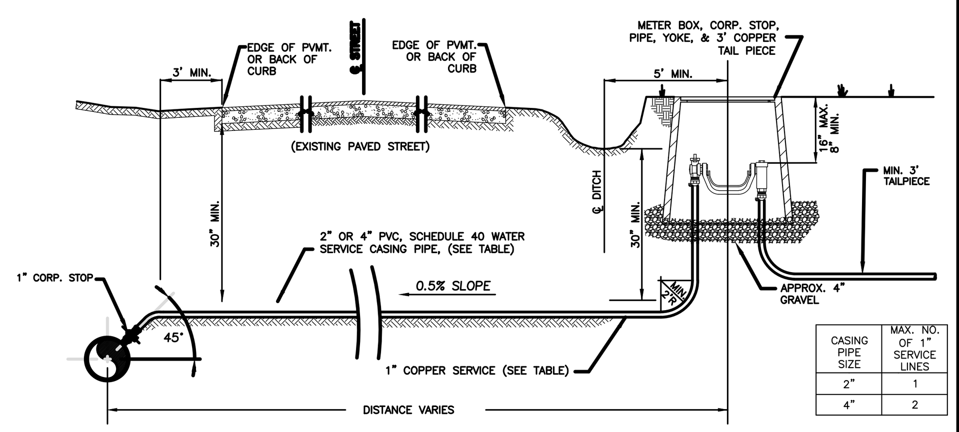


| CASING PIPE SIZE | MAX. NO. OF 1" SERVICE LINES |
|---|---|
| 2" | 1 |
| 4" | 2 |

## TYPICAL WATER SERVICE LINE WITH P.V.C. CASING PIPE FOR FAR SIDE SERVICE ON EXISTING STREET
N.T.S.

WD-1 / 12 — REV. 04/2021

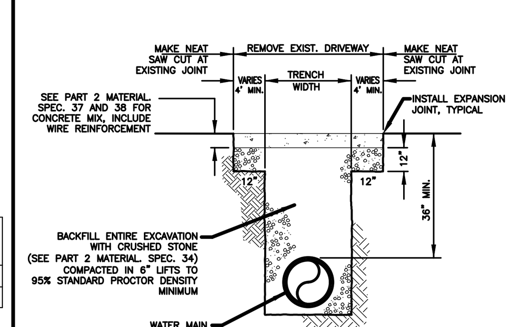


## PERMANENT CONCRETE DRIVEWAY CROSSING REPAIR
N.T.S.

WD-1 / 15 — REV. DEC. 2006

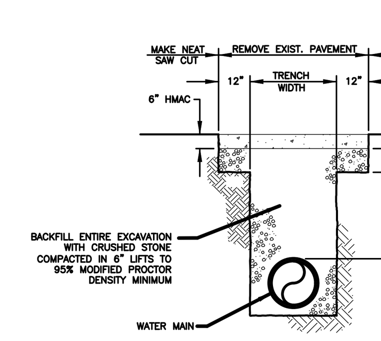


## PERMANENT ASPHALT DRIVEWAY/STREET CROSSING REPAIR
N.T.S.

WD-1 / 16 — REV. 12/2021

RESERVED

REV. AUG. 2007

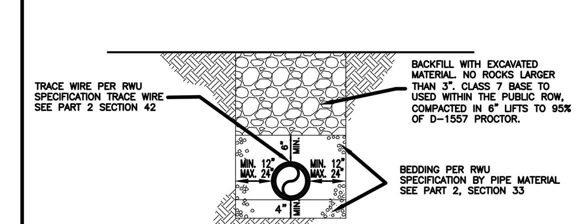


## TRENCH/PIPE BEDDING DETAIL FOR WATER MAINS
N.T.S.

WD-1 / 18 — REV. 12/2025

RESERVED

WD-1 / 13 — WD-1 / 14 — WD-1 / 17

NOT USED

REV. AUG. 2007

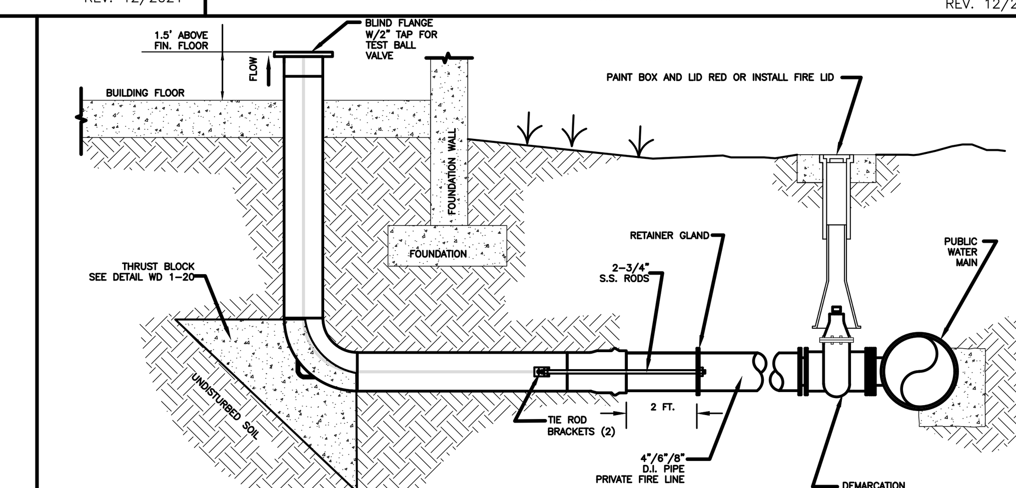


## IN-BUILDING STAINLESS STEEL FIRE LINE RISER
N.T.S.

WD-1 / 11B — REV. 04/2021

GENERAL CONSTRUCTION NOTES:

A. The contractor will be held solely responsible for damage occurring to any property during the construction of this project. Said contractor shall take all necessary pre-cautions to prevent property damage.
B. In accordance with generally accepted construction practices, the contractor will be solely and completely responsible for conditions of the job site, including safety of all persons and property during performance of the work. This requirement will apply continuously and not be limited to normal working hours. The duty of Rogers Water Utilities to conduct construction inspection or review of the contractor's performance is not an inspection or review of the adequacy of the contractor's safety measures in, on, or near the construction site.
C. All water and sewer improvements shall be constructed. in accordance with the latest revision to the Rogers Water Utilities Standard Specifications.
D. The contractor is specifically cautioned that the location and/or elevation of existing utilities as shown on these plans is based on records of the various utility companies and, where possible, measurements taken in the field. The information is not to be relied on as being exact or complete. The contractor must call the appropriate utility company at least 48 hours before any excavation to request exact field location of utilities. It shall be the responsibility of the contractor to relocate all existing utilities which conflict with the proposed improvements shown on the plans.
E. Contractor is to remove and dispose of all debris, rubbish and other materials resulting from previous and current demolition operations. Disposal will be in accordance with all local, state and/or federal regulations governing such operations.
F. Prior to installation of any utilities, the contractor is to excavate, verify, and calculate all crossings and inform the Rogers Water Utilities of any conflicts prior to construction.
G. Construction shall not start on any water utility until approval is given by Rogers Water Utilities. Said con-tractor shall not operate any valve, hydrant, or water utility appurtenance nor shall he attach to or tap any water utility main without approval. The contractor shall bear the cost and consequence of any disruption of utility operation caused by construction.

WD-1 / 19

WD-1-2021.DWG

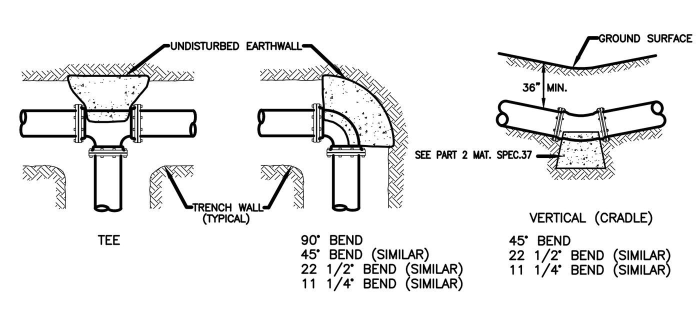


NOTES:
1. ALL FITTINGS SHALL BE MECHANICAL JOINT WITH RETAINER GLANDS.
2. DO NOT COVER BELLS OR FLANGES WITH CONCRETE.
3. WRAP ALL FITTINGS WITH VISQUEEN.
4. BACK ALL TEES ACCORDING TO SIZE OF BRANCH.
5. BACKING FUTURE LINE EXTENSIONS SHALL BE SUCH THAT LATER REMOVAL IS POSSIBLE.
6. ALL BENDS WHERE FITTINGS ARE USED, BOTH HORIZONTAL AND VERTICAL, SHALL BE BACKED.
7. REACTION BACKING TABLE IS BASED ON 150 P.S.I. AND SOIL BEARING PRESSURE OF 2,500 LB./SQ. FT. ADDITIONAL BACKING MAY BE REQUIRED IN SOME AREAS AS DIRECTED BY ENGINEER.

REACTION BACKING TABLE
REQUIRED SQ. FT. OF UNDISTURBED EARTHWALL FOR REACTION BACKING

| SIZE | TEE OR PLUG/CAP | 90° | 45° | 22 1/2° | 11 1/4° |
|---|---|---|---|---|---|
| 4" | 2 | 2 | 1 | 1 | |
| 6" | 3 | 3 | 2 | 1 | |
| 8" | 4 | 4 | 3 | 2 | |
| 12" | 10 | 10 | 5 | 3 | 2 |
| 18" | 26 | 26 | 14 | 7 | 4 |
| 24" | 38 | 38 | 20 | 10 | 7 |
| 30" | 59 | 59 | 32 | 16 | 10 |

(TYPE OF FITTINGS: TEE OR PLUG/CAP, 90°, 45°, 22 1/2°, 11 1/4°)

## THRUST BLOCKING DETAIL
N.T.S.

WD-1 / 20 — REV. 12/2021

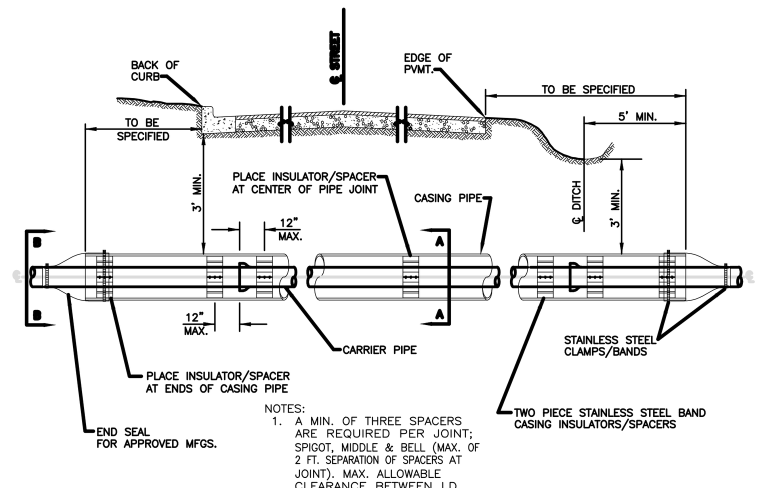


NOTES:
1. A MIN. OF THREE SPACERS ARE REQUIRED PER JOINT; SPIGOT, MIDDLE & BELL (MAX. OF 2 FT. SEPARATION OF SPACERS AT JOINT). MAX. ALLOWABLE CLEARANCE BETWEEN I.D. OF CASING PIPE & TOP RUNNER OF SPACER IS 1".
2. ALL D.I. PIPE JOINTS WITHIN CASING SHALL HAVE 'FIELD LOK' GASKET. EACH RESTRAINED JOINT SHALL BE IDENTIFIED BY A MARK ON THE PIPE BELL.

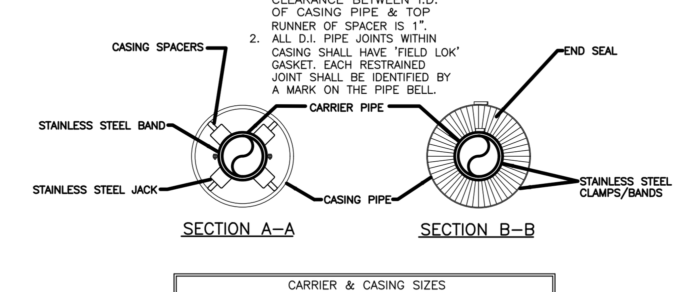


CARRIER & CASING SIZES

| | | | | | | |
|---|---|---|---|---|---|---|
| CARRIER | 6" | 8" | 12" | 18" | 24" | 30" |
| CASING | 16" | 16" | 24" | 30" | 36" | 48" |
| CASING/WALL THICKNESS | .250 | .250 | .375 | .500 | .500 | .625 |

## JACK & BORE UNDER ROADWAY DETAIL
N.T.S.

WD-1 / 21 — REV. 12/2021

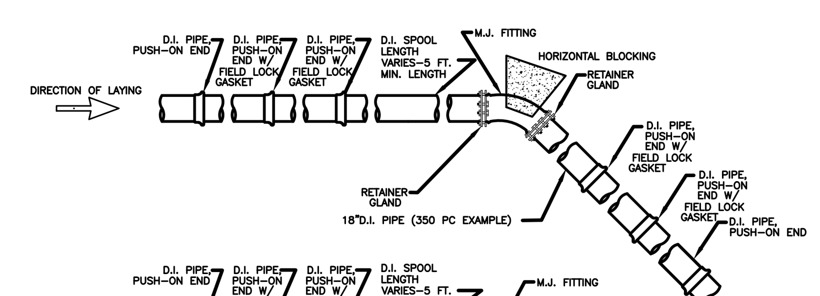


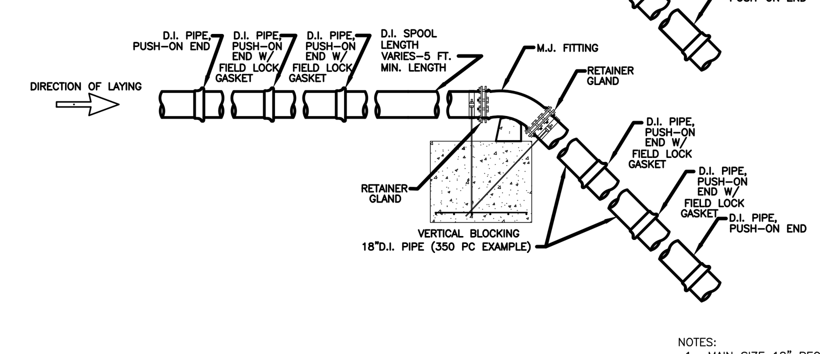


NOTES:
1. MAIN SIZE 18" REQUIRES TWO RESTRAINED JOINTS (W/FIELD LOCK GASKETS) AWAY FROM FITTING, (36 FT.); MAIN SIZE 24" REQUIRES THREE RESTRAINED JOINTS AWAY FROM FITTING, (54 FT.); AND MAIN SIZE 30" REQUIRES FOUR RESTRAINED JOINTS AWAY FROM FITTING (72 FT.), OR AS SPECIFIED BY ENGINEER.

## FIELD LOCK GASKETS DETAIL FOR HORIZONTAL AND VERTICAL BENDS (TO BE USED IN CONJUNCTION WITH THRUST BLOCKING) FOR 18-INCH AND LARGER WATER MAINS
N.T.S.

WD-1 / 22 — REV. 12/2021

ALL FITTINGS SHALL BE MECHANICAL JOINT WITH RETAINER GLANDS.

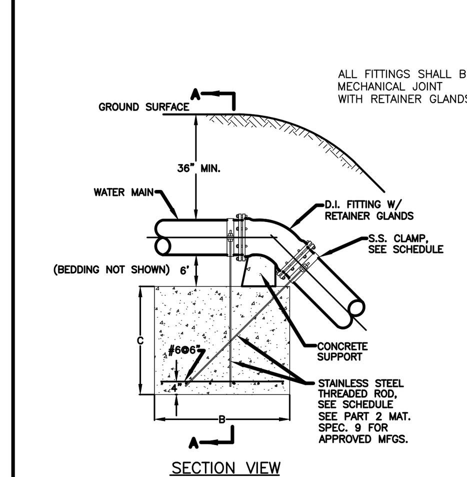


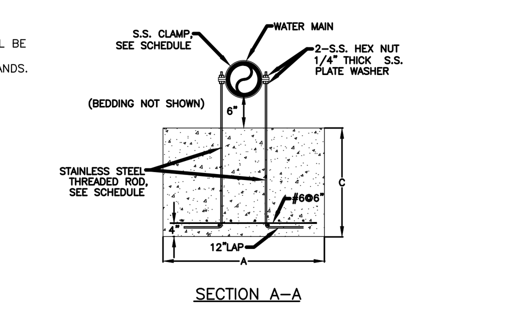


NOTES:
1. ALL FITTINGS SHALL BE MECHANICAL JOINT WITH RETAINER GLANDS.
2. DO NOT COVER BELLS OR FLANGES WITH CONCRETE.
3. WRAP ALL FITTINGS WITH VISQUEEN.
4. GULF STATE HANGER'S 2-BOLT S.S. PIPE CLAMP, MEDIUM-FIG. 80 OR APPROVED EQUAL.

BLOCKING SCHEDULE (DIMENSIONS)

| PIPE SIZE | | 45° | 22 1/2° | 11 1/4° | ROD DIA. |
|---|---|---|---|---|---|
| 8" | VOLUME REQ'D (CU.FT.) | 42.9 | 21.9 | 11.0 | 3/4 IN. |
| | A (FT.) | 4.0 | 4.0 | 4.0 | |
| | B (FT.) | 2.75 | 2.0 | 1.5 | |
| | C (FT.) | 4.0 | 3.0 | 2.0 | |
| | CLAMP (2 EA.) | 3/8 IN. X 1¼ IN. | | | |
| 12" | VOLUME REQ'D (CU.FT.) | 94.1 | 48.0 | 24.1 | 7/8 IN. |
| | A (FT.) | 5.0 | 5.0 | 5.0 | |
| | B (FT.) | 4.75 | 2.4 | 1.6 | |
| | C (FT.) | 4.0 | 4.0 | 3.0 | |
| | CLAMP (2 EA.) | ½ IN. X 2 IN. | | | |
| 18" | VOLUME REQ'D (CU.FT.) | 210 | 107 | 54 | 1 IN. |
| | A (FT.) | 6.0 | 6.0 | 6.0 | |
| | B (FT.) | 4.5 | 3.6 | 2.25 | |
| | C (FT.) | 8.0 | 5.0 | 4.0 | |
| | CLAMP (2 EA.) | 5/8 IN. X 2½ IN. | | | |
| 24" | VOLUME REQ'D (CU.FT.) | 374 | 191 | 96 | 1¼ IN. |
| | A (FT.) | 6.0 | 6.0 | 6.0 | |
| | B (FT.) | 7.8 | 4.6 | 3.2 | |
| | C (FT.) | 8.0 | 7.0 | 5.0 | |
| | CLAMP (2 EA.) | 5/8 IN. X 3 IN. | | | |

VOLUME CALCULATED ON THE BASIS OF CONCRETE REACTING THRUST ON THE RESPECTIVE BENDS UNDER AN INTERNAL PRESSURE OF 150 PSI AND THE WEIGHT OF CONCRETE IS 150 POUNDS PER CU. FT.

## VERTICAL TIE-DOWN BLOCKING DETAIL
N.T.S.

WD-1 / 23 — REV. DEC. 2006

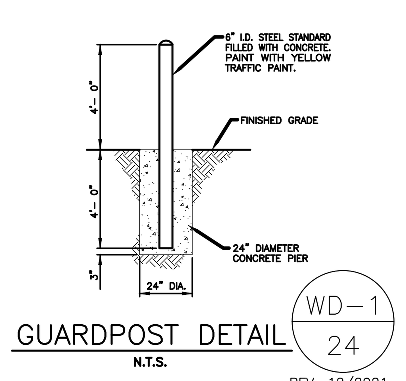


## GUARDPOST DETAIL
N.T.S.

WD-1 / 24 — REV. 12/2021

# WATER DETAILS

RWU ROGERS WATER UTILITIES

P.O. DRAWER 338
601 SOUTH 2ND ROGERS, ARKANSAS
72757-0338

| DRAWN BY: | DATE: | SHEET NO. |
|---|---|---|
| TLK | REV. DEC/25 | WD-1 |
| CHECKED BY: BTS | | |