NOTES:
1. A MANHOLE BARREL CONSTRUCTION JOINT IS ALLOWED WITHIN A STRAIGHT WALL SEGMENT OF THE BARREL AT 12-FOOT ABOVE THE MANHOLE BASE AND SHALL HAVE A KEY WAY AND #4 REBAR AT 12-INCH ON CENTERS WITH 15" EMBEDMENT. A WATER STOP SHALL BE USED IF DIRECTED BY THE UTILITY.
2. THE BASE AND WALLS SHALL BE POURED MONOLITHICALLY.
3. THE CENTERLINE OF ALL PIPES ENTERING AND LEAVING MANHOLE SHALL PASS THROUGH THE CENTER OF THE MANHOLE.
4. MANHOLES THAT ARE LESS THAN 12'-6" IN DEPTH SHALL BE INDIVIDUALLY DESIGNED PER LOCATION CONDITIONS AND MUST BE APPROVED BY THE UTILITY.
5. POUR OUTSIDE MANHOLE BASE SO THAT THE TOP OF OUTSIDE BASE IS EVEN OR 2-INCH ABOVE THE CROWN OF THE PIPES ENTERING THE MANHOLE BASE. EXTEND MANHOLE BASE 12-INCH ON CENTERS WITH 15" EMBEDMENT. A WATER STOP SHALL BE USED IF DIRECTED BY THE UTILITY.
6. CONSTRUCT FLOW CHANNEL FOR ALL PIPES ENTERING MANHOLE, INCLUDING SERVICES. SLOPE CHANNELS TO MATCH PIPE INVERTS.
7. THE TOP OF MANHOLE TO BE LEVEL WITH FINISHED GRADE, UNLESS OTHERWISE NOTED OR DIRECTED BY THE UTILITY.
8. BRUSH FINISH SURFACES OF CONCRETE AND REMOVE ALL SHARP EDGES.

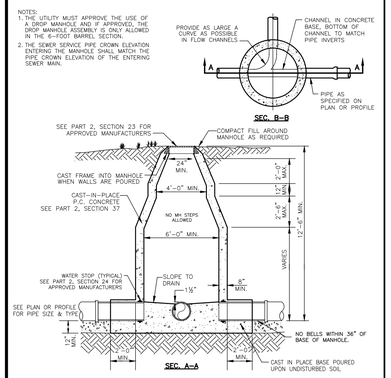

6 FT. CAST–IN–PLACE SANITARY SEWER MANHOLE DETAIL

N.T.S.

SD–1 / 1 — REV. 05/2021

NOTES:
1. A MANHOLE BARREL CONSTRUCTION JOINT IS ALLOWED WITHIN A STRAIGHT WALL SEGMENT OF THE BARREL AT 12-FOOT ABOVE THE MANHOLE BASE AND SHALL HAVE A KEY WAY AND #4 REBAR AT 12-INCH ON CENTERS WITH 15" EMBEDMENT. A WATER STOP SHALL BE USED IF DIRECTED BY THE UTILITY.
2. THE BASE AND WALLS SHALL BE POURED MONOLITHICALLY.
3. THE CENTERLINE OF ALL PIPES ENTERING AND LEAVING MANHOLE SHALL PASS THROUGH THE CENTER OF THE MANHOLE.
4. MANHOLES THAT ARE LESS THAN 6-FOOT IN DEPTH SHALL BE INDIVIDUALLY DESIGNED PER LOCATION CONDITIONS AND MUST BE APPROVED BY THE UTILITY.
5. POUR OUTSIDE MANHOLE BASE SO THAT THE TOP OF OUTSIDE BASE IS EVEN OR 2-INCH ABOVE THE CROWN OF THE PIPES ENTERING THE MANHOLE BASE. EXTEND MANHOLE BASE 12-INCH ON CENTERS WITH 15" EMBEDMENT. A WATER STOP SHALL BE USED IF DIRECTED BY THE UTILITY.
6. CONSTRUCT FLOW CHANNEL FOR ALL PIPES ENTERING MANHOLE, INCLUDING SERVICES. SLOPE CHANNELS TO MATCH PIPE INVERTS.
7. THE TOP OF MANHOLE TO BE LEVEL WITH FINISHED GRADE, UNLESS OTHERWISE NOTED OR DIRECTED BY THE UTILITY.
8. BRUSH FINISH SURFACES OF CONCRETE AND REMOVE ALL SHARP EDGES.

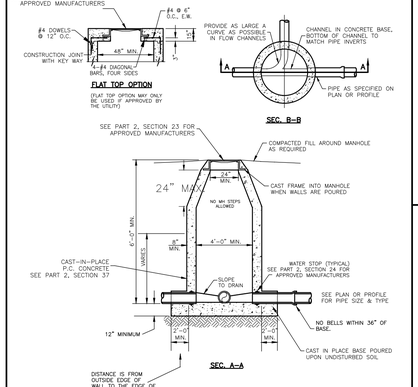

NOTES:
1. THE UTILITY MUST APPROVE THE USE OF A DROP MANHOLE AND IF APPROVED, THE DROP MANHOLE ASSEMBLY IS ONLY ALLOWED IN THE 4-FOOT BARREL SECTION.
2. THE SEWER SERVICE PIPE CROWN ELEVATION ENTERING THE MANHOLE SHALL MATCH THE PIPE CROWN ELEVATION OF THE ENTERING SEWER MAIN.

4 FT. CAST–IN–PLACE SANITARY SEWER MANHOLE DETAIL

N.T.S.

SD–1 / 2 — REV. 05/2021

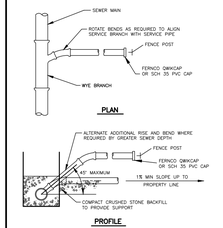

NOTES:
1. MODIFIED RISER LATERAL SHALL BE USED WHEN DEPTH OF COVER EXCEEDS 7' – 0"
2. PROVIDE 4" MIN. DEPTH OF CRUSHED STONE FOR BEDDING AS REQUIRED FOR MAINS. SEE PART 2, SECTION 33.
3. SERVICE LATERAL STUBS SHALL TERMINATE AT LEAST 2 FEET INSIDE THE PROPERTY LINE BUT IN NO CASE SHALL THE SERVICE LATERAL STUB TERMINATE AT A DISTANCE LESS THAN 8 FEET FROM THE SANITARY SEWER MAIN.
4. BURY A 6 FOOT STEEL TEE FENCE POST AT END OF SERVICE LATERAL STUB AND BACK FILL TO FINISHED GRADE OF PROPERTY. A GUARD 6–FOOT TEE FENCE POST SHALL ALSO BE REQUIRED IF BURIED STEEL POST TOP IS BELOW FINISHED GRADE OF PROPERTY.

STANDARD SEWER SERVICE LATERAL

N.T.S.

SD–1 / 3

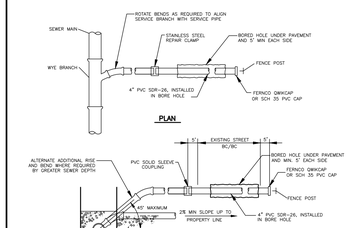

NOTES:
1. MODIFIED RISER LATERAL SHALL BE USED WHEN DEPTH OF COVER EXCEEDS 7' – 0"
2. PROVIDE 4" MIN. DEPTH OF CRUSHED STONE FOR BEDDING AS REQUIRED FOR MAINS. SEE PART 2, SECTION 33.
3. SERVICE LATERAL STUBS SHALL TERMINATE AT LEAST 2 FEET INSIDE THE PROPERTY LINE BUT IN NO CASE SHALL THE SERVICE LATERAL STUB TERMINATE AT A DISTANCE LESS THAN 8 FEET FROM THE SANITARY SEWER MAIN.
4. BURY A 6 FOOT STEEL TEE FENCE POST AT END OF SERVICE LATERAL STUB AND BACK FILL TO FINISHED GRADE OF PROPERTY. A GUARD 6–FOOT TEE FENCE POST SHALL ALSO BE REQUIRED IF BURIED STEEL POST TOP IS BELOW FINISHED GRADE OF PROPERTY.

BORED SEWER SERVICE LATERAL UNDER EXISTING STREET

N.T.S.

SD–1 / 4 — REV. 05/2021

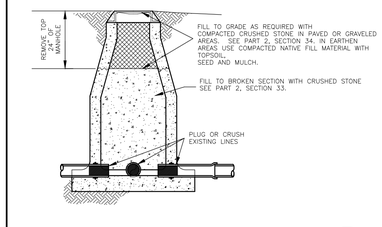

SANITARY SEWER MANHOLE ABANDONMENT

N.T.S.

SD–1 / 5 — REV. 05/2021

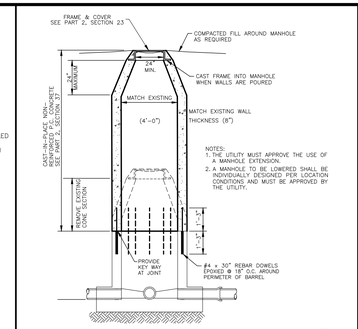

SANITARY SEWER MANHOLE EXTENSION/SHORTENING DETAIL

N.T.S.

SD–1 / 6 — REV. 05/2021

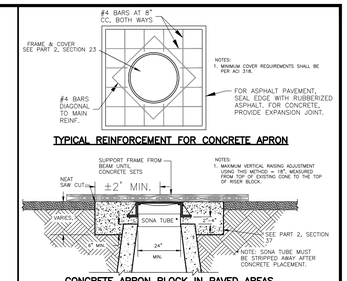

FOR MANHOLE EXTENSION ADJUSTMENT WHICH EXCEED 18" IN PAVED AREAS, OR FOR MANHOLE SHORTENING IN PAVED AREAS, SEE DETAIL SD–1/6
SANITARY SEWER MANHOLE EXTENSION/SHORTENING DETAIL

MANHOLE RIM APRON (PAVED AREAS) (FOR EXISTING MANHOLE ONLY)

SD–1 / 7 — REV. 12/2025

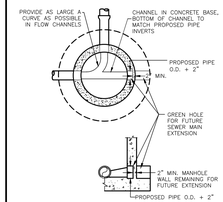

GREENHOLE/BLOCK OUT FOR FUTURE EXTENSION

SD–1 / 8 — REV. DEC. 2006

NOTES:
1. IF DEPTH OF BURY EXCEEDS 4 FT., SELF-LOCKING VALVE EXTENSION STEM SHALL BE REQUIRED. VALVE EXTENSION STEM SHALL EXTEND TO 12"-24" BELOW FINISHED GRADE SURFACE. SEE PART 2, SECTION 10 FOR APPROVED MANUFACTURERS
2. THE TRACER WIRE SHALL EXTEND ALONG THE OUTSIDE AND TO THE TOP OF THE BOX. 6" LAP SHALL BE PROVIDED INTO THE BOX.

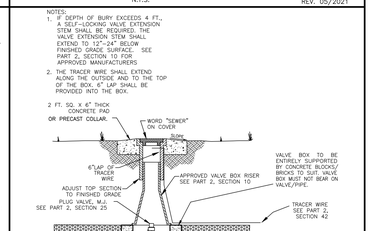

4"–12" SEWER FORCE MAIN PLUG VALVE DETAIL

N.T.S.

SD–1 / 9

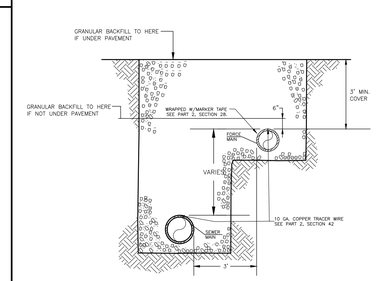

PARALLEL SEWER FORCE MAIN & SANITARY SEWER MAIN

N.T.S.

SD–1 / 10 — REV. 12/2025

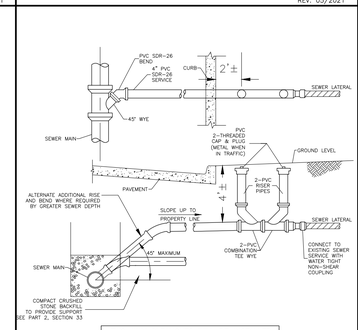

TWO-WAY CLEANOUTS WILL BE INSTALLED WHEN SEWER SERVICE IS IN THE STREET

4 INCH TWO–WAY SERVICE CLEANOUT

N.T.S.

SD–1 / 11 — REV. DEC. 2006

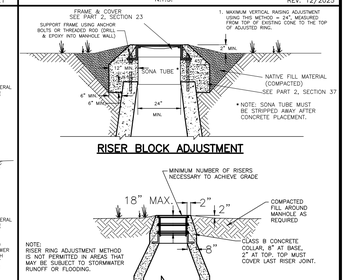

FOR MANHOLE EXTENSION ADJUSTMENT WHICH EXCEED 18" IN GREEN AREAS, OR FOR MANHOLE SHORTENING IN GREEN AREAS, SEE DETAIL SD–1/6
SANITARY SEWER MANHOLE EXTENSION/SHORTENING DETAIL

MANHOLE RIM ADJUSTMENT (GREEN AREAS) (FOR EXISTING MANHOLE ONLY)

SD–1 / 12 — REV. 12/2025

RESERVED

SD–1 / 13

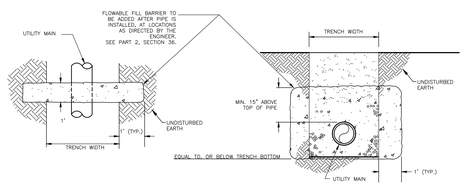

ANTI–SEEPAGE BARRIER COLUMN

N.T.S.

SD–1 / 14 — REV. DEC. 2006

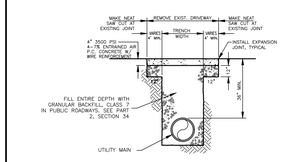

CONCRETE DRIVEWAY CROSSING REPAIR

N.T.S.

SD–1 / 15

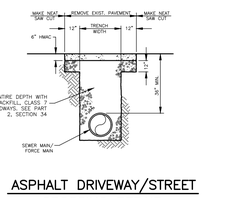

ASPHALT DRIVEWAY/STREET CROSSING REPAIR

N.T.S.

SD–1 / 16

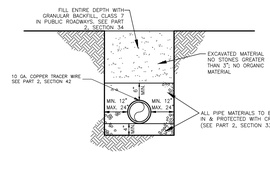

TRENCH/PIPE BEDDING DETAIL FOR SEWER FORCE MAINS & SANITARY SEWER MAINS

N.T.S.

SD–1 / 17 — REV. 12/2025

RESERVED

SD–1 / 18

GENERAL CONSTRUCTION NOTES:

A. The contractor will be held solely responsible for damage occurring to any property during the construction of this project. Said contractor shall take all necessary pre–cautions to prevent property damage.

B. In accordance with generally accepted construction practices, the contractor will be solely and completely responsible for conditions of the job site, including safety of all persons and property during performance of the work. This requirement will apply continuously and not be limited to normal working hours.

The duty of Rogers Water Utilities to conduct construction inspection or review of the contractor's performance is not an inspection or review of the adequacy of the contractor's safety measures in, on, or near the construction site.

C. All water and sewer improvements shall be constructed in accordance with the latest revision to the Rogers Water Utilities Standard Specifications.

D. The contractor is specifically cautioned that the location and/or elevation of existing utilities as shown on these plans is based on records of the various utility companies and, where possible, measurements taken in the field. The information is not to be relied on as being exact or complete. The contractor must call the appropriate utility company at least 48 hours before any excavation to request exact field location of utilities. It shall be the responsibility of the contractor to relocate all existing utilities which conflict with the proposed improvements shown on the plans.

E. Contractor is to remove and dispose of all debris, rubbish and other materials resulting from previous and current demolition operations. Disposal will be in accordance with all local, state and/or federal regulations governing such operations.

F. Prior to installation of any utilities, the contractor is to excavate, verify, and calculate all crossings and inform the Rogers Water Utilities of any conflicts prior to construction.

G. Construction shall not start on any water utility until approval is given by Rogers Water Utilities. Said con–tractor shall not operate any valve, hydrant, or water utility appurtenance nor shall he attach to or tap any water utility main without approval. The contractor shall bear the cost and consequence of any disruption of utility operation caused by construction.

SD–1 / 19

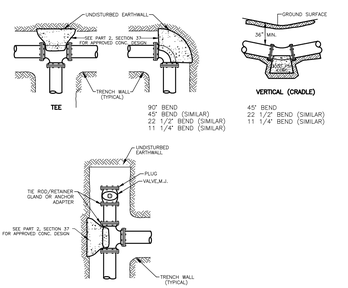

NOTES:
1. All fittings shall be mechanical joint.
2. Do not cover bells or flanges with concrete.
3. Wrap all fittings with visqueen.
4. Back all tees according to size of branch.
5. Blocking future line extensions shall be such that later removal is possible.
6. All bends where fittings are used, both horizontal and vertical, shall be backed.
7. Reaction backing table is based on 150 p.s.i. and soil bearing pressure of 2,500 lb./sq. ft. Additional backing may be required in some areas as directed by engineer.

REACTION BACKING TABLE						
REQUIRED SQ. FT. OF UNDISTURBED EARTHWALL FOR REACTION BACKING						
SIZE	TYPE OF FITTINGS					
	TEE, OR PLUG/CAP	90°	45°	22 1/2°	11 1/4°	
4"	1	1	1	1		
6"	2	2	1	1		
8"	3	3	1	1		
10"	4	4	2	1	1	
12"	10	10	5	3	2	

SEWER FORCE MAIN THRUST BLOCKING DETAIL

N.T.S.

SD–1 / 20 — REV. 05/2021

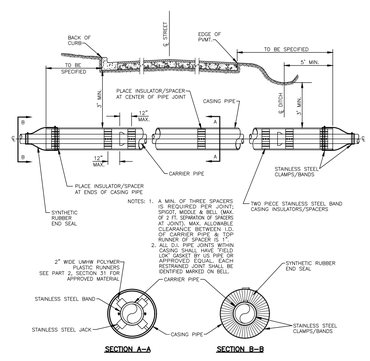

CARRIER & CASING SIZES									
CARRIER	6"	8"	10"	12"	15"	16"	18"	20"	24"
CASING	14"	16"	18"	24"	30"	30"	30"	36"	36"
CASING/WALL THICKNESS	.250	.250	.250	.375	.500	.500	.500	.500	.500

JACK & BORE UNDER ROADWAY DETAIL

N.T.S.

SD–1 / 21 — REV. DEC. 2006

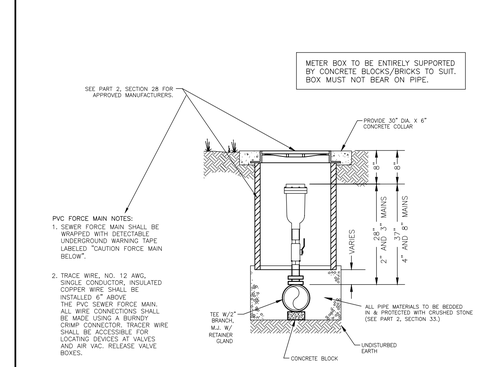

SEWER FORCE MAIN AIR AND VACUUM RELEASE VALVE ASSEMBLY

N.T.S.

SD–1 / 22

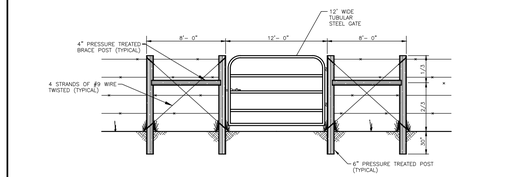

FARM GATE INSTALLATION DETAIL

N.T.S.

SD–1 / 23

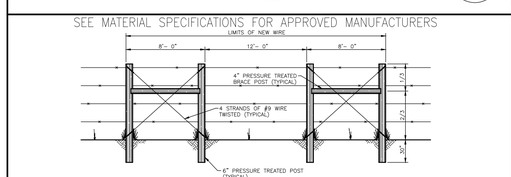

BARBED WIRE FENCE CROSSING REPAIR DETAIL

N.T.S.

SD–1 / 25

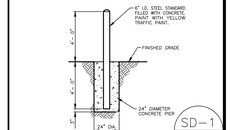

GUARDPOST DETAIL

N.T.S.

SD–1 / 24

SEWER DETAILS

RWU ROGERS WATER UTILITIES
P.O. DRAWER 338
601 SOUTH 2ND ROGERS, ARKANSAS
72757–0338

DRAWN BY: TLK	DATE: REV. DEC./25	SHEET NO. SD–1
CHECKED BY: BTS		

SD-1 2025.DWG